University of Basel

Department of Biomedical Engineering

Design of a Rotational Endoscope Joint with Integrated Joint Position Sensor

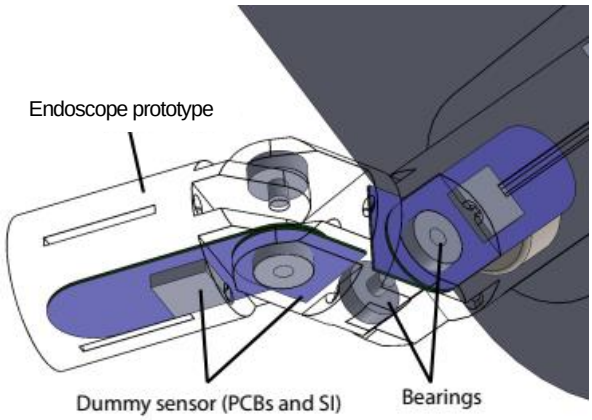

A sensor dummy has been placed into an articulated 8 mm diameter endoscope.The semi circular disk printed onto the PCB creates a change in capacitance when the joints rotate.

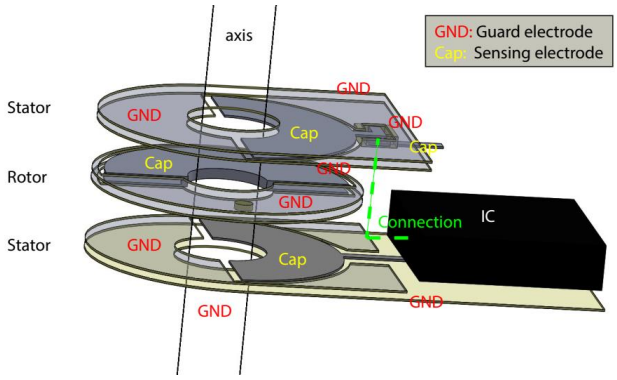

Improved concept of the sensor that introduces a third PCB as a rotor inbetween. With this configuration the sensor performance is thought to greatly increase in comparison to the prototype produced in this work.

Master's Thesis by Drews Saverio at BIROMED-Lab for project MIRACLE.

Endoscopes have small diameters and often lack the space to integrate joint position sensors.

In this work, a concept to create cheap and compact rotary position sensors that allow implementation into current endoscope designs is presented. The sensor concept, based on the capacitance measurement principle, consists of ultra-thin printed circuit boards (PCBs) and a surface mount device (SMD) sensor interface (SI). The presented design is theoretically capable of resolving the endoscope joint angle down to 0.05 degrees.

A prototype was produced that achieves rotation angle measurement repeatability of 1 degree and has a nonlinearity of about 5 degrees. The results seem promising, especially as design improvements proposed in this work will lead to higher repeatability and higher linearity. The concept allows flexibility in design and quick adjustments, which may lead to fast iterations and improvements. For robotic endoscopes, the designed sensor can create new opportunities for feedback control. The presented sensor design also allows implementation into other devices where space is scarce, and miniature rotation sensors are required.

Funding:

WSS
WERNER SIEMENS-STIFTUNG

Supervision:
Lorin Fasel
lorin.fasel@unibas.ch

Manuela Eugster
Manuela.eugster@unibas.ch

Prof. Dr. Georg Rauter
BIROMED-Lab
georg.rauter@unibas.ch